Firestop Products & Systems
Submittal Documentation

____ Service Penetrations
X Construction Joints/Gaps

Project:

Contractor:

Installer:

Supplier:

Grabber Construction Products
866-237-GRAB(4722)

Distributor:

Table of Contents

GRABBER CONSTRUCTION PRODUCTS

205 Mason Circle, Concord CA 94520

GrabberGard EFC, IFC & EFS

THESE PRODUCTS ARE TESTED TO THE FOLLOWING TEST STANDARDS

In the USA:

ASTM E-814	Standard Test Method for Fire Tests of Through Penetrations Fire Stops
ASTM E-1399	Cyclic Movement and Measuring the Minimum and Maximum Joint Widths of Architectural Joint Systems
UL 1479	Fire Tests of Through-Penetration Firestops
UL 2079	Tests for Fire Resistance of Building Joint Systems

In Canada:

ULC S115	Standard Method of Fire Tests of Firestop Systems

TESTED BY THIRD PARTY AGENCIES

Underwriters Laboratories, Inc. (UL)
Intertek Testing Services Inc. – Warnock Hersey (WHI)

No Asbestos or PCBs are used or contained in this product.

LEED is a trademark of the US Green Building Council

To Whom It May Concern:

Re: LEED Information on Grabber Construction Products' GrabberGard Firestopping Products

This letter will detail the contribution of Grabber Construction Products' GrabberGard firestopping products to the LEED® (Leadership in Energy and Environmental Design) Green Building Rating System® in accordance with LEED-NC Version 4.1 For New Construction & Major Renovations.

In reference to LEED® Material and Resource (MR) – Credit 2 – Construction Waste Management – the following Grabber' materials are recyclable where facilities exist:

Packaging	Recyclable Product	Weight Per Unit		
Carton	Cardboard	56 g	–	EBI-60
		70 g	–	Putty Stick
		190 g	–	10 oz plastic tube
		350 g	–	20 oz foil package
		410 g	–	10 L plastic jar
		600 g	–	29 oz plastic tube
10.1 oz (300ml) plastic tube	HDPE	49 g	/	Tube
20 oz (600ml) foil pack	Aluminum	5 g	/	Pack
29 oz (850ml) tube	Fiberboard	84 g	/	Tube
35.2 oz (1L) EZ pour plastic bottle	HDPE	50 g	/	Bottle
2.5 gallon (9.5L) plastic pail	HDPE	0.8 kg	/	Pail
2.65 gallon (10 L) plastic jar	HDPE	345 g	/	Jar
5 gallon (18.9L) plastic pail	HDPE	1.2 kg	/	Pail
Wooden pallet	Wood	21 kg	/	Pallet

In reference to LEED® Material and Resources – Credits 4.1 & 4.2 – Recycled Content, all GrabberGard firestopping products contain 5% post-consumer recycled content.

In reference to LEED® Material and Resources – Credit 5 - Regional Materials, Grabber can confirm that a minimum of 50% of the raw materials used in manufacturing the GrabberGrad firestopping products are sourced and processed within a 500-miles radius of our manufacturing facility in Vancouver, BC.

If the project site is located within a 500-mile radius of our manufacturing site then this manufacturing site can contribute to earning Materials and Resource Credit 5.1 & 5.2.

The volatile organic content (VOC) of GrabberGard firestopping products are listed below and meets the minimum LEED® requirements for low-emitting materials. These materials can assist to earn Indoor Environmental Quality (IEQ) – Credit 4.1 – Low-Emitting Materials: Adhesives & Sealants (Architectural Sealants) & Credit 4.2 – Low-Emitting Materials: Paints & Coatings (Architectural Sealants).

GrabberGard Firestopping Product	VOC content [g/L]
EFC	32.5
IFC	37.1
EFS	81.3

If you have any additional questions, please feel free to contact us at (800) 237-4722.

PRODUCT DATA SHEET GRABBERGARD EFC

Description

GRABBERGARD EFC is a superior performance latex-based endothermic firestop caulk. It has excellent adhesion and bonding characteristics and will not slump or sag out after it has been properly installed. GRABBERGARD EFC elastomeric caulk has been designed to stop the passage of fires, smoke and fumes through fire-rated assemblies after it has been fully cured. GRABBERGARD EFC is chemically compatible with plastic pipes and cable jackets and is water resistant after fully cured. Once cured Grabbergard EFC provides a durable and flexible firestop and can be repaired if damaged or cut.

Applications

GRABBERGARD EFC firestop caulk provides an effective firestop seal when used as a single or multiple component system for through-penetrations, construction joints and voids. To make certain installation is correct, consult manufacturer's current listings, as well as, Third Party published Fire Resistance Directories and/or their websites. GRABBERGARD EFC common uses and features are listed below:

Used on: Single and multiple penetrations

Metallic pipes
- Copper, steel, cast iron
- Conduits

Non-metallic pipes
- ABS, CPVC, FRPP, PE, PEX, PVC
- Rigid and ENT conduit

Insulated pipes
- Fiberglass
- AB/PVC

Electrical cables and wires
- Jacket & non-jacketed

Cable trays

Mechanical ducts

Construction joints/gaps
- Top-of-Wall
- Horizontal and vertical joints
- Perimeter floor joints

Voids

Common construction substrate materials:
- Concrete
- Concrete block
- Steel deck
- Wood
- Gypsum wallboard

Features: Red Color

Non-toxic

Safe and easy to use

Easy clean up (Water Only)

Low volatile organic content (VOC)

No asbestos or PCB

Water resistance (when fully cured)

Mildew resistant (when fully cured)

Paintable (with latex based paints)

Excellent application characteristics
- Flows easily
- No slump
- Superior bond and adhesion

Excellent acoustic properties

Seals smoke and gases

One-component systems

Advantages

Endothermic – When GRABBERGARD EFC is exposed to high temperatures or direct fire, it releases water vapor, forms a solid char and retards the spread of fire.

Single Component

GRABBERGARD EFC Caulk can be used as a single component firestop in many applications. Just install the caulk directly into the opening without using fibrous insulation materials. In many situations GRABBERGARD EFC will replace the more conventional intumescent firestop devices such as pipe collars and wrap strips. This will reduce both the cost and installation time.

Versatility

GRABBERGARD EFC adheres to dry and damp concrete, wood, metals and other common construction material surfaces to form an air and watertight bond. GRABBERGARD EFC can be painted over using a latex-based paint after fully cured.

Flexibility

When installed GRABBERGARD EFC is properly installed in construction joints it will allow up to 33 per cent extension and compression movement of the intersecting assemblies. It will also accommodate longitudinal and lateral movement of through and partial service penetrating items installed in the assembly. GRABBERGARD EFC will remain flexible after it has fully cured.

GREENGUARD
PRODUCT CERTIFIED FOR LOW CHEMICAL EMISSIONS
UL.COM/GG
UL 2818
GOLD

CLASSIFIED C UL US

C ETL US
Intertek

December 2019

PRODUCT DATA SHEET GRABBERGARD EFC

Limitations

Consult the Installation Instructions, Storage and Handling and Transportation Sections. **Exposure to rain, running or standing water; before, the sealant is cured may cause the installed material(s) to wash out.** The curing process occurs naturally through the evaporation of its water content into the atmosphere. Slower cure times may be experienced if the sealant is installed at low temperatures, damp and/or in high humidity environments. Any materials used in the firestop system for damming, insulation or support that may not allow for the free passage of air could result in longer curing times. The environment in which the compound is being used should be considered when estimating cure times.

Compliance/Approvals

GRABBERGARD EFC has been Third Party tested for many firestop applications. They meet or exceed the requirements of ASTM E 814; ASTM E 119; UL 1479; UL 2079; ULC S 115-M95; ULC S 101; ASTM E 84. Underwriters Laboratories (UL) and Intertek Warnock Hersey are Third Party fire endurance testing agencies accredited by ICBO, BOCA, and SBCCI (National Evaluation Services) in the United States.

Additional Testing

GRABBERGARD EFC caulk becomes an integral component in a complete building system of walls, floor/ceiling assemblies, service penetration, joints and the like. For this reason, its physical compatibility to other materials used in these complex configurations requires more than the routine firestopping product testing. The results of these additional tests are listed in Table 1,Physical and Chemical Properties.

GRABBERGARD EFC caulk has proven that it has all the physical and chemical characteristics desired in a firestopping product. After it has been installed and fully cured, it has excellent stability and flexibility, even after four weeks at freezing temperatures of -15°F (-26°C) and exposure to extreme temperatures of 300 F(149°C) for 24 hours. Dimensional changes were well within the accepted standards (<2% per ASTM C 356). Dynamic testing has demonstrated the high elasticity properties of GRABBERGARD EFC.

Installation Instructions

GRABBERGARD EFC must be installed in compliance with the listed system designs published by Third Party testing laboratories (UL, ITS Warnock Hersey). Refer to their respective published Fire Resistance Directories and/or their Websites. GRABBERGARD EFC does not require mineral wool insulation in many applications.

Prep-work

To install properly, remove excessive dust, dirt, debris, grease, oil and standing water.

Application

Apply caulking material with standard cartridge or bulk-loading application guns or trowel in place with standard toweling tools. Install the required amount of caulking material into the opening using sufficient pressure to ensure it is in contact with all surfaces, substrates and/or penetrating items. The manufacturer recommends tooling the surface with a moist putty knife or similar tooling utensil. Tooling the caulking material will create a stronger bond and a smooth finish especially on irregular or porous surfaces. Do not apply GRABBERGARD EFC to mineral wool that is or was wet from exposure to water, standing water, rain or snow.

Caution: Mineral wool may cause eye, skin or respiratory tract irritation. Avoid contact with eyes, skin of clothing. Recommend using gloves and goggles. Refer to mineral wool manufacturer's Material Safety Data Sheets.

Installation Temperature

For best results, installation temperatures should be between 45°-90°F(7°-32°C).

Maintenance

No special maintenance is required after the GRABBERGARD EFC sealant is installed and fully cured. If, after installation, the GRABBERGARD EFC sealant is damaged or cut, repairs should be made with the same sealant.

GREENGUARD
PRODUCT CERTIFIED FOR LOW CHEMICAL EMISSIONS
UL.COM/GG
UL 2818
GOLD

CLASSIFIED C UL US

C ETL US
Intertek

December 2019

PRODUCT DATA SHEET GRABBERGARD EFC

Manufacturer's Recommendations
The manufacturer recommends this product be installed by those trained in proper installation procedures (Approved Installer Card) and be able to read and understand a firestop system design listing (i.e. UL or WHi Listed System Design).

Storage and Handling
Keep product stored in a protected covered area in its original unopened containers. Manufacturer recommends storage temperatures to between 40°-90°F(4°-32°C).

DO NOT ALLOW TO FREEZE

Product has a shelf life of one(1) year. Stock rotation program is recommended.

Transportation
Recommended transportation temperatures should be between 40°-90°F(4°-32°C).

DO NOT ALLOW TO FREEZE

First Aid
In case of contact with eyes, flush with water and consult a physician. Skin contact, clean up thoroughly with water or soapy water. Consult a physician if eye or skin irritation develops or is persistent. **SEE MSDS FOR ADDITIONAL INFORMATION.**

Availability
GRABBERGARD EFC caulk is supplied in:

- 10 fl. oz. (300ml) plastic cartridges
- 29 fl. oz. (850ml) cartridges
- 20 fl. oz. (590ml) sausages
- 5 gal. (18.9L) tapered plastic pails

Coverage
Estimated product usage will vary depending on opening size and configuration. Check GRABBERGARD'S estimating charts for coverage.

Warranty
Grabber Construction Products will not accept liability for more than product refund. Any claim regarding product defect must be received in writing within 1 year from date of shipment. Grabber makes no other Warranty or Guarantee express or implied, including warranties of fitness for a particular purpose or merchantability. The seller shall assume no other liability for incidental or consequential damages arising out of the sale or use of this product.

Technical Services
For technical information and assistance regarding application information, code requirements and performance specifications:

Toll Free	1-866-237-GRAB(4722)
Web Site	www.grabberman.com

GREENGUARD
PRODUCT CERTIFIED FOR LOW CHEMICAL EMISSIONS
UL.COM/GG
UL 2818
GOLD

CLASSIFIED C UL US

C ETL US
Intertek
December 2019

PRODUCT DATA SHEET GRABBERGARD EFC

Table 1 – Physical and Chemical Properties

As Supplied

Type of Polymer	Waterborne Resin
Odor	Mild Latex
Solids Content (Wt%)	77±2%
Application Temperatures	45°-90°F(7°-32°C)
Viscosity (ASTM D-2196)	560000-744000cps
Extrudability	Passed
Color - (ASTM C-834)	Rust Red
Specific Gravity - (ASTM D-1475)	1.40-1.50
Dry Time - (ASTM D-1640)	
Dry to touch @ 6mils	20-30 mins
Full Cure Time (depends on thickness & environment)	7-21 days
pH - (ASTM E-70)	8-9

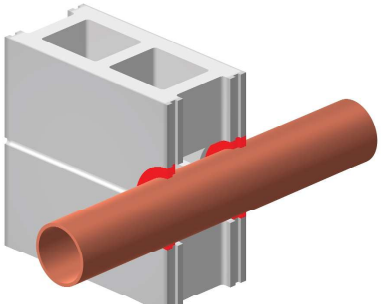

Typical Pipe Penetration

As Cured

In Service Temperature	up to 120°F(49°C)
Moisture Absorption	<4%
Stability [Dimensional, Cracking, Blisters, Flexibility]	Passed
Corrosion - (ASTM C-655) [for Aluminum, Copper, Steel, Galvanized Steel, Stainless Steel]	Passed
Volume Shrinkage - (ASTM C-1241)	Passed
Chemical Compatibility - (ASTM D-543)	Passed
Slump Test - (ASTM D-2202 - Modified)	Passed
Hardness - (ASTM D-2240, Shore A)	22
Freeze/Thaw - (ASTM D-2243)	Excellent
Tensile Properties - (ASTM D-2370)	
Tensile Strength	26 psi
Maximum Elongation	1400%
Corrosion - (ASTM D-5894)	Passed
Surface Burning Characteristics - (ASTM E-84)	
Flame Spread Index	<25
Smoke Developed Index	<50
STC Sound Transmission Loss - (ASTM 90-99)	Full Recovery

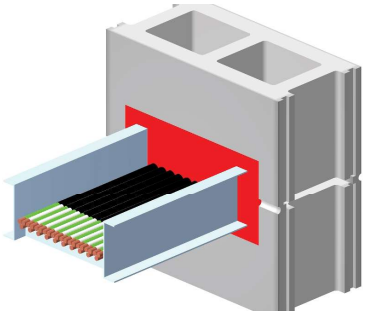

Typical Cable Tray Penetration

GREENGUARD
PRODUCT CERTIFIED FOR LOW CHEMICAL EMISSIONS
UL.COM/GG
UL 2818
GOLD

CLASSIFIED C UL US

C ETL US
Intertek

December 2019

System No. BW-S-0010

Assembly Ratings 1 & 2 Hr (See Item 2)

Nominal Joint Width –3/4 in.

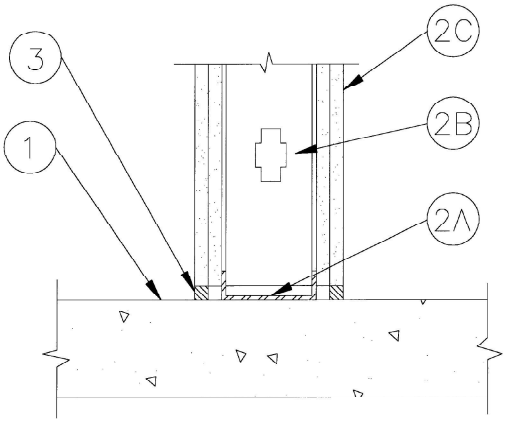

1. **Floor Assembly –** Min 4-1/2 in. thick reinforced lightweight or normal weight (100-150 pcf) structural concrete. Floor may also be constructed of any 6 in. thick UL Classified hollow-core **Precast Concrete Units***.
   See **Precast Concrete Units** category in the Fire Resistance Directory for names of manufactures.

2. **Wall Assembly –** The 1 or 2 hr fire-rated gypsum board/steel stud wall assembly shall be constructed of the materials and in the manner specified in the individual U400 or V400 Series Wall or Partition Design in the UL Fire Resistance Directory. In addition, the wall may incorporate a head-of-wall joint system constructed as specified in the HW Series Joint Systems in the UL Fire Resistance Directory. The wall shall include the following construction features:
   A. **Steel Floor Runner –** Floor runners of wall assembly shall consist of min No. 25 gauge galv steel channels sized to accommodate steel studs (Item 2B). Floor runners to be provided with min 1-1/4 in. flanges. Runners secured with steel fasteners spaced 12 in. OC.
   B. **Studs –** Steel studs to be min 2-1/2 in. wide. Studs cut 1/2 to 3/4 in. less in length than assembly height with bottom nesting in, resting on and fastened to floor runner with sheet metal screws. Stud spacing not to exceed 24 in. OC.
   C. **Gypsum Board* –** Gypsum board installed to a min total thickness of 5/8 or 1-1/4 in. on each side of wall for a 1 or 2 hr rated wall, respectively. Wall to be constructed as specified in the individual U400 or V400 Series Design in the UL Fire Resistance Directory, except that a max 3/4 in. gap shall be maintained between the bottom of gypsum board and top of concrete floor.
   The hourly fire rating of the joint system is equal to the hourly fire rating of the wall.

3. **Fill, Void or Cavity Material* – Sealant – Max separation between top of floor and bottom of gypsum board is 3/4 in.** Min 5/8 in. thickness of fill material installed on each side of the wall between the bottom of the gypsum board and the top of the concrete floor, flush with each surface of the wall.
   GRABBER CONSTRUCTION PRODUCTS INC – GrabberGard EFC

*Bearing the UL Classification Mark

FL0712

Underwriters Laboratories Inc.®

System No. FF-D-0048

Assembly Ratings 1 & 2 Hr (See Item 2)
Nominal Joint Width –1 in.
Class II Movement Capabilities – 25% Compression or Extension

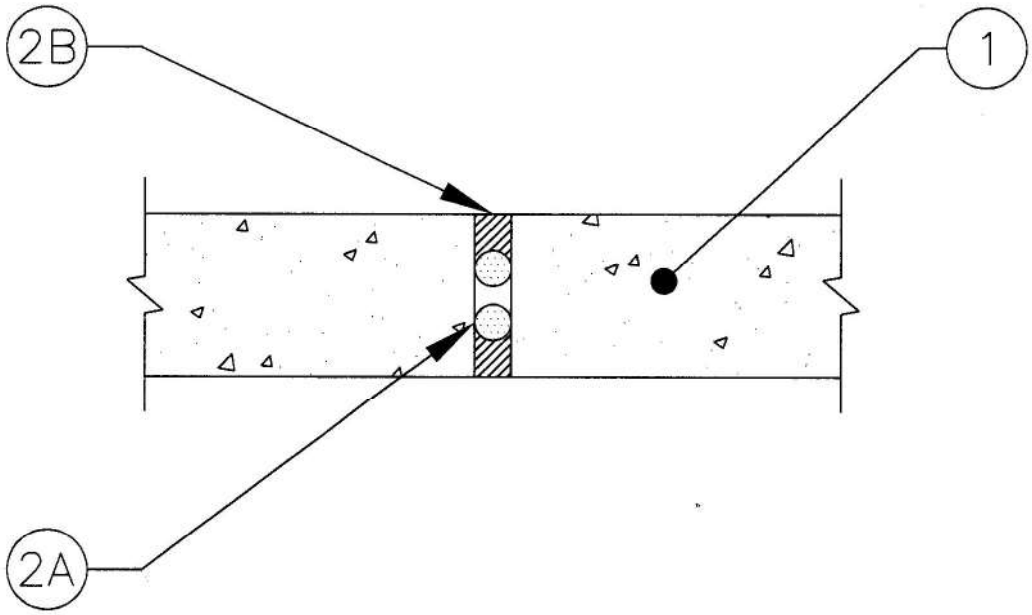

1. **Floor Assembly –** Min 4-1/2 in. thick steel-reinforced lightweight or normal weight (100-150 pcf) structural concrete.

2. **Joint Systems – Max width of joint (at time of installation of joint system) is 1 in. The joint system is designed to accommodate a max 25 percent compression or extension from its installed width.** The joint system shall consist of the following:
   A. **Packing Material – Backer Rod –** Nom 1-1/4 in. diam polyethylene backer rod compressed and firmly packed into joint opening and recessed from both sides of floor to accommodate required thickness of fill material.
   B. **Fill, Void or Cavity Material* – Sealant –** Min 1 in. thickness of fill material applied within the joint, flush with both surfaces of floor.
   GRABBER CONSTRUCTION PRODUCTS INC – GrabberGard EFC

*Bearing the UL Classification Marking

FL0712

Underwriters Laboratories Inc.®

System No. FW-D-0039

Assembly Ratings 2 Hr
Nominal Joint Width –1 in.
Class II Movement Capabilities – 25% Compression or Extension

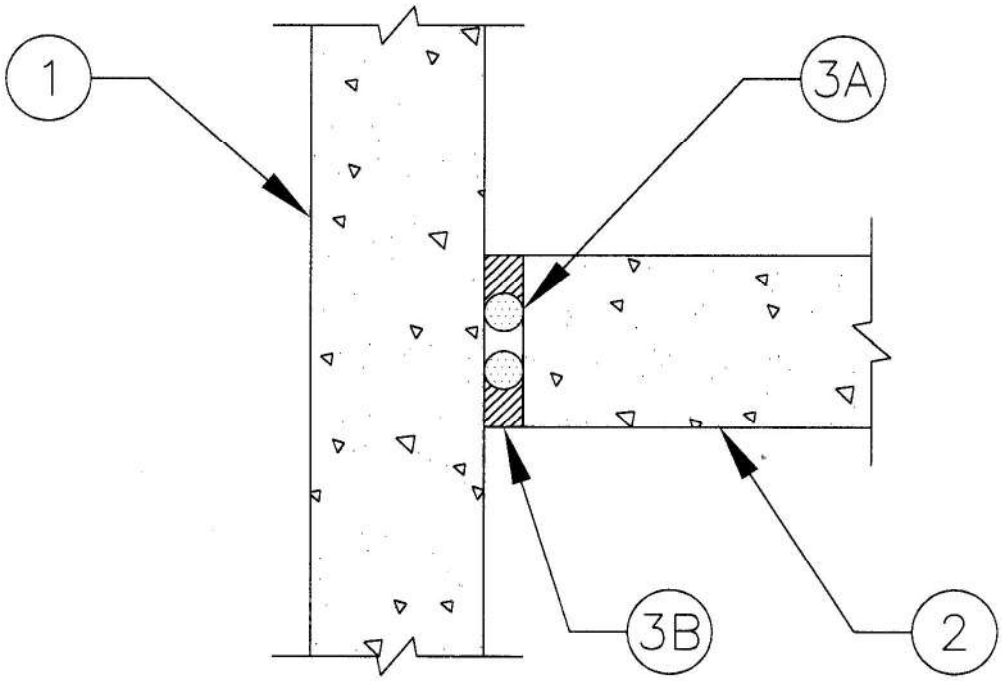

1. **Wall Assembly** – Min 4-1/2 in. thick reinforced lightweight or normal weight (100-150 pcf) structural concrete. Wall may also be constructed of any UL Classified **Concrete Blocks***.
   See Classified **Concrete Blocks** (CATZ) category in the Fire resistance Directory for names of manufactures.

2. **Floor Assembly –** Min 4-1/2 in. thick steel-reinforced lightweight or normal weight (100-150 pcf) structural concrete.

3. **Joint Systems – Max width of joint (at time of installation of joint system) is 1 in. The joint system is designed to accommodate a max 25 percent compression or extension from its installed width.** The joint system shall consist of the following:
   A. **Packing Material – Backer Rod –** Nom 1-1/4 in. diam polyethylene backer rod compressed and firmly packed into joint opening and recessed from both sides of wall to accommodate required thickness of fill material.
   B. **Fill, Void or Cavity Material* – Sealant –** Min 1 in. thickness of fill material applied within the joint, flush with both surfaces of wall.

GRABBER CONSTRUCTION PRODUCTS INC – GrabberGard EFC

*Bearing the UL Classification Marking

FL0712

Underwriters Laboratories Inc.®

System No. WW-D-0078

Assembly Rating – 2 Hr
Nominal Joint Width – 3/4 in. (19 mm)
Class II Movement Capabilities – 33% Compression and Extension

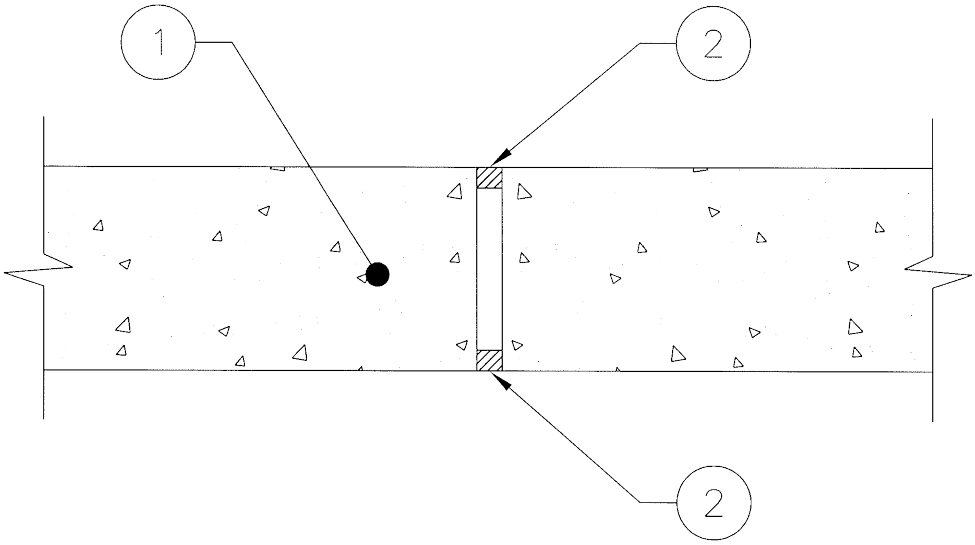

1. **Wall Assembly –** Min 4-1/2 in. (114 mm) thick steel-reinforced lightweight or normal weight (100-150 pcf or 1600-2400 kg/m³) structural concrete. Wall may also be constructed of any UL Classified **Concrete Blocks.***
   See **Concrete Blocks** (CATZ) category in the Fire Resistance Directory for names of manufacturers.

2. **Joint System – Fill, Void or Cavity Materials* – Max width of joint (at time of installation) is 3/4 in. (19 mm). The joint system is designed to accommodate a max 33 percent compression or extension from its installed width.** The joint system shall consist of a min 5/8 in. (16 mm) thickness of fill material applied within the joint, flush with each surface of wall.
   GRABBER CONSTRUCTION PRODUCTS INC – GrabberGard IFC or GrabberGard EFC

*Bearing the UL Classification Marking

FL0712

Underwriters Laboratories Inc.®

System No. WW-S-0054

Assembly Rating – 1 and 2 Hr (See Item 1)
Nominal Joint Width – 3/4 in. (19 mm)

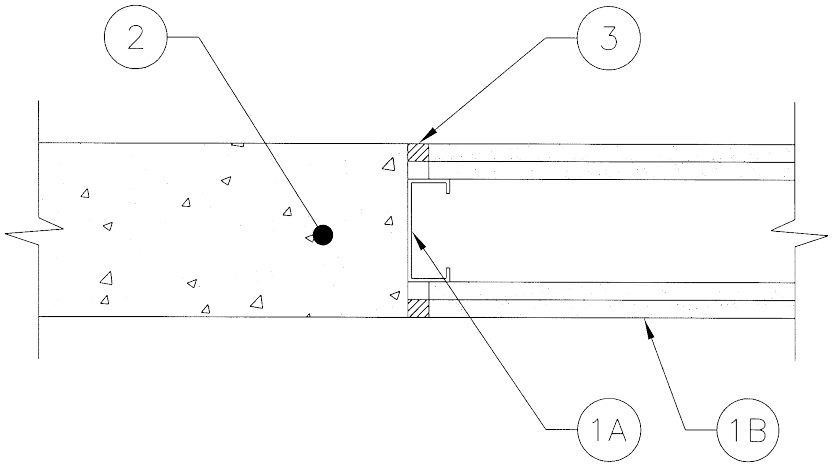

1. **Wall Assembly –** The 1 or 2 hr fire-rated gypsum board/steel stud wall assembly shall be constructed of the materials and in the manner specified in the individual U400 or V400 Series Wall or Partition Design in the UL Fire Resistance Directory and shall include the following construction features:
   A. **Studs –** Steel studs to be min 3-1/2 in. (89 mm) wide by 1-1/4 in. (32 mm) deep corrosion protected min 25 MSG steel channels. Studs not to exceed 24 in. (610 mm) OC. Stud installed nominally centered at joint location.
   B. **Gypsum Board* –** Gypsum board sheets installed to a min total thickness of 5/8 in. (16 mm) or 1-1/4 in. (32 mm) on each side of wall for 1 and 2 hr fire rated assemblies, respectively.

   The hourly rating of the joint system is dependent on the hourly rating of the wall assembly in which it is installed.

2. **Wall Assembly –** Min 4-1/2 in. (114 mm) thick steel-reinforced lightweight or normal weight (100-150 pcf or 1600-2400 kg/m³) structural concrete. Wall may also be constructed of any UL Classified **Concrete Blocks.***
   See **Concrete Blocks** (CATZ) category in the Fire Resistance Directory for names of manufacturers.

3. **Joint System – Fill, Void or Cavity Materials* – Max width of joint (at time of installation) is 3/4 in. (19 mm).** The joint system shall consist of a min 5/8 in. (16 mm) thickness of fill material applied within the joint, flush with each surface of wall.
   GRABBER CONSTRUCTION PRODUCTS INC – GrabberGard IFC or GrabberGard EFC

*Bearing the UL Classification Marking

FL0712

Underwriters Laboratories Inc.®

Safety Data Sheet (SDS)

OSHA Haz Com Standard 29 CFR 1910.1200.

Revision Date: 03/05/2021 Version: 2.0 Replaces Version: 1.0

SECTION 1: PRODUCT AND COMPANY INDENTIFICATION

Product Name:	GrabberGard EFC	Product Code:	GGEFC10, GGEFC20, GGEFC29, GGEFC5
Product Type:	Endofhermic Sealant	Use:	Firestopping Sealant
Chemical Family:	Organic/Inorganic		

Supplier Address:
Grabber Construction Products
205 Mason Circle
Concord, CA 94520

Contact Information:
Telephone: 800.810.1788
MEDICAL EMERGENCY Phone: Poison Control Center
1-877-671-4608 (toll free) or 1-303-592-1711
TRANSPORT EMERGENCY Phone: CHEMTREC
1-800-424-9300 (toll free) or 1-703-527-3887
Internet: www.firestop.com

EFC -SDS

SECTION 2. HAZARDS IDENTIFICATION

GHS CLASSIFICATION	
Physical Hazards:	None
Oral:	Not Classified
Dermal:	Not Classified
Inhalation:	Not Classified
Skin Corrosion / Irritation:	Not Classified
Serious Eye Damage / Eye Irritation:	Not Classified
Respiratory or Skin Sensitization:	Not Classified
Germ Cell Mutagenicity:	Not Classified
Carcinogenic:	Not Classified
Reproductive Toxicology:	Not Classified
Target Organ System Toxicity - Single Exposure:	Not Classified
Target Organ System Toxicity - Repeated Exposure:	Not Classified
Aspiration Toxicity:	Not Classified

ENVIRONMENTAL HAZARDS	
Hazards to the Aquatic Enviroment:	Not Classified
Acute Aquatic Toxicity:	Not Classified
Chronic Aquatic Toxicity:	Not Classified
Bioaccumulation Potential:	Not Classified
Rapid Degradability:	Not Classified

Safety Data Sheet (SDS)

OSHA Haz Com Standard 29 CFR 1910.1200

Revision Date: 03/05/2021 Version: 2.0 Replaces Version: 1.0

GHS LABEL ELEMENTS, INCLUDING PRECAUTIONARY STATEMENTS:	
Hazard Symbols:	None
Precautionary Statements:	P102 - Keep Out Of Reach of Children P264 - Wash Hands Throughly After Handling

POTENTIAL HEALTH EFFECTS:	
Inhalation:	May cause irritation to nose and throat.
Skin contact:	May cause slight irritation to skin.
Eye contact:	May cause slight irritation to eyes on contact.
Ingestion:	Not expected to be harmful by ingestion. Ingestion of large amounts may produce gastrointestinal disturbances including irritation, nausea, and diarrhea.
Existing conditions aggravated by exposure:	None known This product is consisted hazardous under 29 CFR 1910.1200 (Hazard Communication). See Section 11 for additional toxicological information.

SECTION 3. COMPOSITION /INFORMATION ON INGREDIENTS

Hazardous Components	CAS Number	Precentage %*
Calcuim Carbonate	1314-65-3	< 50
Vinyl Acetate Polymers	Not disclosed	< 40
Water	7732-18-5	< 25
Auxiliary Chemicals	None known	< 5
Color Pigment	1309-37-1	< 0.5

* Exact percentage is a trade secret. Concentration range is provided to assist users in providing appropriate protection.

SECTION 4. FIRST AID MEASURES

Inhalation:	Move to fresh air in case of accidental inhalation of vapours.
Skin contact:	Wash affected area immediately with soap and water.
Eye contact:	Immediatel flush eyes with plenty of water for at least 15 minutes. If symptoms develop and persist, get medical attention.
Ingestion:	Consult a physician if necessary.
Symptoms:	See Section 11.

SECTION 5. FIRE FIGHTING MEASURES

Flash point:	Not applicable
Autoignition temperature:	Not available
Flammable / Explosive limits - lower:	Not available
Flammable / Explosive limits - upper:	Not available
Extinguishing media:	All standard firefighting procedures
Special firefighting procedures:	Do not breathe combustion gases. Wear protective equipment
Unusual fire or explosion hazards:	None known
Hazardous combustion products:	Carbon Dioxide (CO_2), Carbon Monoxide (CO), Fragmented Hydrocarbons

Safety Data Sheet (SDS)

OSHA Haz Com Standard 29 CFR 1910.1200

Revision Date: 03/05/2021 Version: 2.0 Replaces Version: 1.0

SECTION 6. ACCIDENTAL RELEASE MEASURES

Use personal protection recommended in Section 8, isolate the hazard area and deny entry to unnecessary and unprotected personnel.

Environmental precautions:	Do not allow to enter drains, surface or ground water.
Clean-up methods:	Wipe up spills to prevent footing hazard. Scrape up spilled material and place in a closed container for disposal. Wear appropriate protective equipment and clothing during clean-up.

SECTION 7. HANDLING AND STORAGE

Handling:	Avoid contact with eyes, skin and clothing. Keep out of the reach of children.
Storage:	Store between 4°C (40°F) and below 32°C (90°F). Keep from freezing. Store in accordance with local regulations. Store in original container protected from direct sunlight, in a cool, dry area. Keep containers closed when not in use. Do not store in unlabeled containers.

For information on product shelf life, please review labels on containers or check the Technical Data Sheet.

SECTION 8. EXPOSURE CONTROLS / PERSONAL PROTECTION

Employers should complete an assessment of all workplaces to determine the need for, and selection of, proper exposure controls and protective equipment for each task performed.

Hazardous Components	ACGIH TLV	OSHA PEL	AIHA WEEL	OTHER
Calcuim Carbonate	10 mg/m^3 TWA (total dust)	5 mg/m^3 PEL (respirable fraction) 15 mg/m^3 PEL (total dust)	None	None
Color Pigment	5 mg/m^3 TWA (respirable fraction)	10 mg/m^3 TWA (fume)	None	None

Engineering controls:	Use general ventilation and use local exhaust, where possible, in confined or enclosed space.
Respiratory protection:	Not normally required. Use NIOSH approved respirator if there is potential to exceed exposure limit(s).
Eye / Face protection:	Safety goggles or safety glasses with side shields.
Skin protection:	Chemical resistant, impermeable gloves; Neoprene, Butyl-rubber, or Nitrile-rubber gloves.

SECTION 9. PHYSICAL AND CHEMICAL PROPERTIES

Physical state:	Pasty
Color:	Red
Odor:	Mild, aromatic
Odor threshold:	Not available
pH:	8.0 - 9.0
Vapor pressure:	18.52 mm Hg
Boiling point/range:	> 100°C (> 212°F)
Melting point/range:	Not available
Specific gravity:	1.40 - 1.50 at 25°C (77°F)
Vapor density:	Heavier than air, (Air = 1)
Flash point:	Not applicable
Flammable / Explosive limits - lower:	Not applicable
Flammable / Explosive limits - upper:	Not applicable
Autoignition temperature:	Not applicable
Evaporation rate:	< 1

Safety Data Sheet (SDS)

OSHA Haz Com Standard 29 CFR 1910.1200

Revision Date: 03/05/2021 Version: 2.0 Replaces Version: 1.0

Solubility in water:	Not applicable
Partition coefficient (n-octanol/water):	Not applicable
VOC content:	32.5 g/l (calculated)

SECTION 10. STABILITY AND REACTIVITY

Stability:	Stable under normal conditions of storage and use.
Hazardous reactions:	Not applicable
Hazardous decomposition products:	Carbon dioxide, carbon monoxide
Incompatible materials:	Strong alkalis, and mineral acids.
Reactivity:	Not applicable
Conditions to avoid:	Do not freeze

SECTION 11. TOXICOLOGICAL INFORMATION

Relevant Routes of Exposure:	Inhalation, Skin Contact, Eyes, Ingestion

Potential Health Effects / Symptoms

Inhalation:	May cause irritation to nose and throat
Skin contact:	May cause slight irritation of skin.
Eye contact:	May cause slight irritation to eyes on contact.
Ingestion:	Not expected to be harmful by ingestion. Ingestion of large amounts may produce gastrointestinal distrubances including irritation, nausea and diarrhea.

Hazardous Components	NTP Carcinogen	IARC Carcinogen	OSHA Carcinogen (Specifically Regulated)
Calcuim Carbonate	No	No	No
Color Pigment	No	No	No

Hazardous Components	Health Effects / Target Organs
Calcuim Carbonate	No Data
Color Pigment	No Data

SECTION 12. ECOLOGICAL INFORMATION

Ecological information:	Not applicable

SECTION 13. DISPOSAL CONSIDERATIONS

Information provided is for unused product only:

Recommend method of disposal:	Dispose should be in accordance with applicable regional, national, Federal, State and local governmental regulations.

Safety Data Sheet (SDS)

OSHA Haz Com Standard 29 CFR 1910.1200

Revision Date: 03/05/2021 Version: 2.0 Replaces Version: 1.0

Waste disposal:	The generation of waste should be avoided or minimized wherever possible. Empty containers may retain some product residues. This material and its containers must be disposed of in a safe way. Dispose of surplus and non-recyclable products via a licensed waste disposal contractor. Disposal of this product should at all times must comply with the requirements of environmental protection and waste disposal legislation and any regional local authority requirements. Avoid dispersal of spilled material and runoff and contact with soil, waterways, drains and sewers.
Hazardous waste number:	It is the responsibility of the user to determine if an item is hazardous as defined in the Resource Conservation and Recovery Act (RCRA) at the time of disposal. Product uses, transformations, mixtures, processes, etc., may render the resulting material hazardous, under the criteria of ignitability, corrosivity, reactivity and toxicity characteristics of the Toxicity Characteristics Leaching Procedure (TCLP) 40 CFR 261.20-24.

SECTION 14. TRANSPORT INFORMATION

Regulatory Information	UN Number	Proper Shipping Name	Classes	PG*	Label	Additional Information
DOT Classification	Not regulated	-	-	-	-	-
TDG Classification	Not regulated	-	-	-	-	-
Mexico Classification	Not regulated	-	-	-	-	-
ADR / RID Class	Not regulated	-	-	-	-	-
IMDG Class	Not regulated	-	-	-	-	-
IATA-DGR Class	Not regulated	-	-	-	-	-

U.S. Department of Transportation Ground (49 CFR)

Proper shipping name:	Not regulated
Hazard class or division:	None
Identification number:	None
Packing group:	None

International Air Transportation (ICAO/IATA)

Proper shipping name:	Not regulated
Hazard class or division:	None
Identification number:	None
Packing group:	None

Water Transportation (IMO/IMDG)

Proper shipping name:	Not regulated
Hazard class or division:	None
Identification number:	None
Packing group:	None

SECTION 15. REGULATORY INFORMATION

United States Regulatory Information

TSCA 8 (b) Inventory Status:	All components are listed or are exempt from listing on the Toxic Substances Control Act Inventory
TSCA 12 (b) Export Notification:	None above reporting de minimus
CERCLA / SARA Section 302 EHS:	None above reporting de minimus
CERCLA / SARA Section 311/312:	Immediate health
CERCLA / SARA 313:	None above reporting de minimus

Safety Data Sheet (SDS)

OSHA Haz Com Standard 29 CFR 1910.1200.

Revision Date: 03/05/2021 Version: 2.0 Replaces Version: 1.0

California Proposition 65:	No California Proposition 65 listed chemicals are known to be present. No California Proposition 65 listed chemicals are know to be present

Canada Regulatory Information	
CEPA DSL / NDSL Status:	All components are listed on or exempt from listing on the Canadian Domestic Substances List.
WHMIS hazard class:	Not controlled

SECTION 16. OTHER INFORMATION

This material safety data sheet contains changes from the previous version in sections:

Prepared by:	Chemical Laboratory
Issue date:	June 1, 2015

This information is provided in good faith and is correct to the best of Grabber Construction Products' knowledge as of the date hereof; however, Grabber makes no representation as to its completeness or accuracy. Customers are encouraged to make their own determination as to the suitability of this product for their purpose prior to use. Grabber disclaims responsibility to damages of any kind resulting from the use of this information. THERE ARE NO WARRANTIES OR REPRESENTATIONS, EXPRESS OR IMPLIED, INCLUDING THOSE OF MERCHANTABILITY OR FITNESS FOR A PARTICULAR PURPOSE WITH RESPECT TO THIS INFORMATION OR TO THE PRODUCT IT DESCRIBES.

CAULKING INSTRUCTIONS - GRABBERGARD EFC

Equipment and Caulking Installations Instructions Using Caulking Applicator Guns

There are different types of caulking applicator guns available. The recommended procedure when using the different styles will be described in Sections A and B. Section C will then describe the recommended procedures to follow to install the caulk and finish the job.

Section A – Applying Caulk in Plastic and Cardboard Fiber Foil Wrapped Cartridges

There are variety of applicator caulking guns available to do firestopping. We recommend using a smooth rod style rather than the less expensive ratchet rod type. When dispensing caulk from a 29 ounce-size cartridge, we recommend a rod type gun with at least a 12:1 thrust ratio. The higher thrust ratio means less hand fatigue since firestopping caulks are usually high viscous caulkings. The higher thrust ratio will also help when the product becomes stiffer in the colder temperatures. (12:1 ration generates approximately 300 pound thrust)

For manual single component cartridge applicator guns.

Select the correct size manual drive frame-style cartridge gun for either the 10-ounce (300ml) or the larger 29-ounce (850ml) plastic or cardboard fiber foil wrapped tube type

Using a utility knife cut off the end of the plastic tip/nozzle to the desired opening size. The cut can be either straight across (90°) or angled (45°). Cutting too small of an opening will restrict the flow of material and a smaller bead size will result. The smaller the opening the higher the trigger action (pressure) required to move the material out of the tube.

On the 29 fl. oz. tubes, insert either a screwdriver or other pointed utensil into the plastic nozzle to puncture the membrane; which will allow the caulk material to flow.

CAULKING INSTRUCTIONS - GRABBERGARD EFC

Pull back the push rod of the frame-style caulking gun to its full extension.

Drop the cartridge into the frame insuring that the plastic nozzle of the cartridge is place through the opening in the end plate.

Repeatedly pull the trigger of the applicator guns until the push rod is advanced to the end of the cartridge. The caulk will begin to flow when some resistance is felt.

When the desired amount of material has been advanced, stop triggering; release the pressure by pressing the lever (tab) located at the back of the handle with your thumb. This causes the push rod to slip back stopping the flow of material.

REFER TO SECTION C TO COMPLETE THE INSTALLATION PROCEDURE.

CAULKING INSTRUCTIONS - GRABBERGARD EFC

Section B- Applying Caulk with Refillable Bulk Loading Applicator Gun

The caulking to be used is shipped in 5-gallon (18.9 liter) plastic tapered pails.

Advance the plunger and push the rod down to the end of the barrel.

To begin the loading process, remove the front cap containing the nozzle.

With a utility knife, cut an opening in the plastic nozzle (cut can be straight across (90°) or angled (45°)).

Coat the threads at the end of the barrel with a solvent (oil) or water to prevent the accumulation of material.

Immerse the open end of the barrel into the material to a depth of approximately 1-inch.

Move the immersed gun slightly around so the material will adhere and form an air seal.

CAULKING INSTRUCTIONS - GRABBERGARD EFC

Hold the barrel steady, grip the T-pull and slowly pull the push rod back drawing the material into the barrel. Pulling the rod back to quickly may result in air pockets and an incomplete fill.

Remove the gun from the pail of material and scrape off the excess amount that has accumulated on the barrel.

Replace the front cap and nozzle.

To stop the flow or product, stop triggering and depress the pressure and release tab on the handle.

Now you are ready to install the material into the openings and joints.

REFER TO SECTION C TO COMPLETE THE INSTALLATION PROCEDURE.

Section C – Installing Firestop Caulk

General Information

All firestopping installations must be performed in compliance with a tested and listed firestop system design. The testing laboratories like Underwriters Laboratories (UL) or Intertek (Warnock Hersey) publish these listings.

For the appropriate listing, consult the manufacturer's literature or the testing laboratories Fire Protection Directories and/or their web sites.

The manufacturer recommends an individual who has been properly trained in the correct procedures should perform all firestop installations. The individual must be able to read and understand a tested firestop listing design.

The applicator should have the following materials and equipment to correctly and safely install firestop caulking.

- Safety Glasses
- Gloves
- Utility (box) knife
- Stainless Steel Spatula
- Cleaning rags
- Plastic spray water bottle (quart/liter) with finger pump trigger/nozzle

Areas to be firestopped should be clean, free from: water, excessive dirt, dust, debris and grease. For the best results, the ideal atmospheric temperatures and environment would be:

- Dry, 60°-75°F (15°C -24°C) & R.H. 50 %.

CAULKING INSTRUCTIONS - GRABBERGARD EFC

When the damming or fire insulation material is required, the following information should be considered before commencing.

- Backer rod used as a damming or support material should be installed into the opening in a thickness and compressed sufficiently as to not dislodge and fall out under normal building movement. Wrap the backer rod completely around the penetration(s) and recess it to accommodate the required amount of firestop caulk.

- Mineral wool when required, as an insulation material, it should be installed into the opening compressed to a thickness as to not dislodge nor fall out under normal building movement. The mineral wool, usually 4 pcf, should be installed to the compression required by the firestop listing. The orientation of the mineral wool is also very important and maybe the difference of the system being in compliance or not. For construction joints or through penetration in floor (horizontal) rated assemblies, the mineral wool or similar fibrous material should be installed with the lamination in a vertical orientation assemblies. The opposite is the rule of joints and through penetrations in wall (vertical) assemblies. Here the laminations should be placed in a horizontal orientation. Installing the mineral wool in these different lamination directions allows the material to be compressed to the density required for the fire rating and building movement.

- Do not install mineral wool that is or has become wet i.e. exposure to water, rain, or snow.

Water base caulks adhere to some construction materials better than others. Applying a light mist of water to these surfaces can in some instances, help the bonding process. Mineral wool, is one of these materials, especially when it is in a vertical orientatation.

Tooling the installed material can be done in several ways:

- Dry tooling: After the material is put in place, using a spatula or other tool that has not been wetted with water, smooth it out.

- Wet tooling: After the material has been put in place, using a spatula or other tool that has been wetted with water, smooth it out.

- Wet tooling: After the material has been installed, lightly mist the material with water. Use a plastic water spray bottle, turn the nozzle to a mist spray orifice, hold the bottle approximately 10-12 inches (255-305mm) from the area. DO NOT APPLY WATER TO THE MATERIAL IN A CONCENTRATED JET SPRAY. This will apply too much water, causing the material to dilute and run out.

CAULKING INSTRUCTIONS - GRABBERGARD EFC

Caulking Penetrations

Install the correct amount of caulk material into the opening (annular space) around the service penetration to the depth/ thickness required. Make sure that caulking is in intimate contact with the substrate and the penetrating item. Once the caulk is in place, tool the material with a tooling utensil (spatula) to a smooth finish. This will push the installed material into areas not covered in the initial caulking procedure. It will also help to ensure a better bond with mating construction materials.

Caulking Construction Joints

Some construction joints do not require damming material or mineral wool to be used to affect a firestop system. When filler caulk material is the only component required, the installation must be installed in accordance with the listing being used. This usually requires the filler material to be installed into the gap/joint. Once the caulking has been trowelled or gunned in place, the installed material should be tooled into a smooth finish. Work the material to ensure no voids and air holes are left. This is particularly important when caulking to fireproofing materials. Cured fireproofing is very porous and the caulking must be tooled to it to ensure a tight seal and a secure mating surface system, refer to the procedures described above for the proper installation before applying the filler caulking material.

Note: *All installation procedures of firestop caulk materials outlined in the proceeding information are* ***water-based compounds.***

NOTES

Grabber Branch Locations

Grabber Atlanta
Duluth, Georgia
770-813-1332

Grabber California
Concord, California
925-687-6606

Grabber Canada
Langley, BC, Canada
604-856-1444

Grabber Frederick
Frederick, Maryland
301-371-0701

Grabber Ft. Myers
Fort Myers, Florida
239-278-1888

Grabber Houston
Houston, Texas
713-460-2716

Grabber Jacksonville
Jacksonville, Florida
713-460-2716

Grabber Kona
Kailua, Kona, Hawaii
808-329-5110

Grabber Miami
Hialeah, Florida
305-820-0975

Grabber Midwest
Maumee, Ohio
419-794-8212

Grabber Missouri
Kansas City, Missouri
816-931-8816

Grabber Northeast
Pennsauken, New Jersey
856-662-2525

Grabber Northwest
Clackamas, Oregon
503-654-5234

Grabber Los Angeles
Santa Fe Springs, California
562-696-5122

Grabber Ohio
Fairfield, Ohio
513-874-9027

Grabber Orlando
Orlando, Florida
407-297-7278

Grabber Pacific
Honolulu, Hawaii
808-836-1161

Grabber San Diego
San Diego, California
856-662-2525

Grabber San Francisco
San Francisco, Califlornia
415-550-7273

Grabber Seattle
Kirkland, Washington
425-828-0570

Grabber Southeast
Pompano Beach, Florida
954-971-4730

Grabber Tampa
Tampa, Florida
813-249-2281

Grabber Texas
Dallas, Texas
972-470-9044

Grabber Treasure Coast
Port St Lucie, Florida
772-878-2680

Grabber Utah
Murray, Utah
801-266-4151

Grabber Virginia
Chantilly, Virginia
703-631-8770

Grabber Washington
Capitol Heights, Maryland
301-808-5100

Grabber/Scorpion Fasteners
East Windsor, Connecticut
860-623-3600

The professional's choice for over 40 years

GRABBER® CONSTRUCTION PRODUCTS
www.grabberman.com

Grabber Divisions

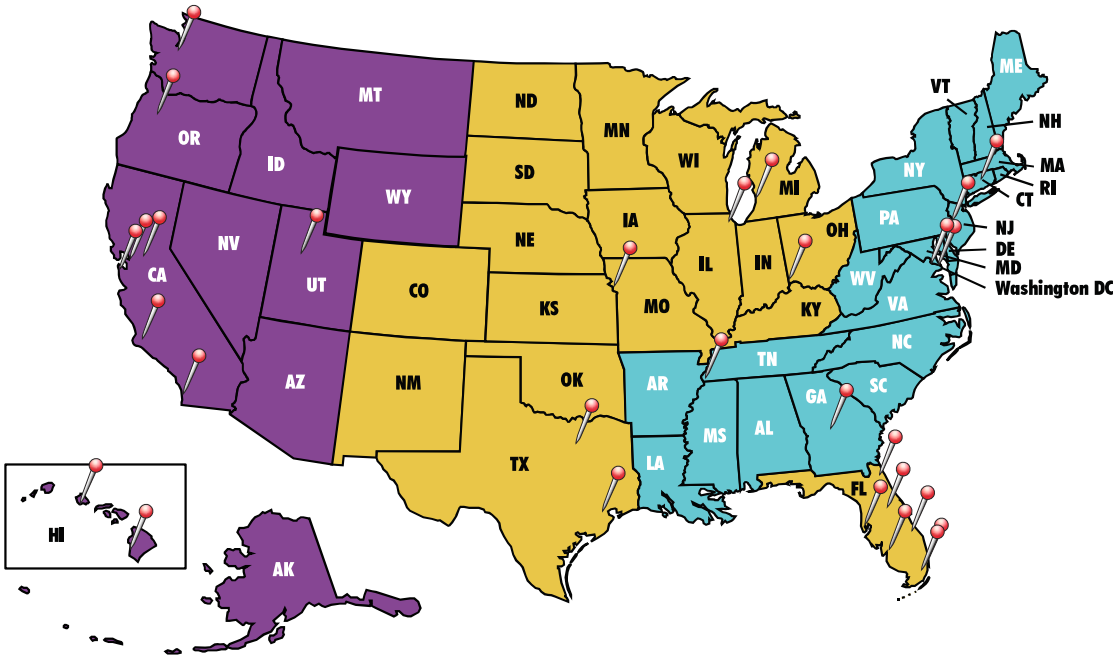

Pacific Division
Phone: 808.836.1161
Fax: 808.833.4291

Gulf Division
Phone: 800.925.0320
Fax: 954.977.3842

Atlantic Division
Phone: 800.241.3161
Fax: 770.813.8184

Grabber has you covered with more than just great fastening products. . .

To put it simply, Grabber can help you build a better product while simultaneously making you more money. Through constant innovation, Grabber continues to simplify the way you work by providing the best, most technologically advanced products available today.

Drywall Screws
Metal Framinig Screws
Concrete Anchors
Pneumatic Nails

Fasten it

Grabber has a full line of fasteners for just about any application. From drywall screws to heavy gauge framing screws Grabber has what you need. Grabber invented the drywall screw and changed an entire industry. For the past 40 years Grabber has been the name you can trust for professional grade fasteners.

SuperDrive
Screw Guns
Chop Saws
Lasers

Drive it

Grabber's SuperDrive tool is designed to make driving screws faster and more accurate. Along with SuperDrive, Grabber offers many other tools that make your work easier including chop saws, routers, lasers and more.

Subfloor Adhesives
Drywall Adhesives
Acoustical Sealants
Fire Stopping Caulks

Caulk it

Grabber offers a complete line of caulks including sound control sealants, subfloor adhesives, drywall adhesives, insulation foam and more. Grabber also offers EFC and IFC fire stopping caulks and sealants.

NO-COAT® Stick Products
NO-COAT® ULTRAFLEX
Drywall Tape
Finishing Tools

Finish it

Grabber has everything you need for finishing your drywall projects. From fiberglass mesh tape and spark perforated drywall tape to NoCoat's innovative structural drywall system, Grabber has what you need to do the job right

---

GRABBER®

Grabber Construction Products
1.800.477.8876
www.grabberman.com

Visit www.grabberman.com or call 800-477-8876 to find a dealer near you.

Grabber is an international distributor and manufacturer of premium fasteners and fastening systems for wood, metal, and drywall applications in the commercial and residential construction markets. Grabber is home to the Deckmaster® Hidden Fastening System, the patented LOX® Drive System, and the SuperDrive Auto-Feed Fastening System. Grabber also distributes a wide range of proprietary tools and accessories, various equipment, and building materials to the construction industry.